TSH690

40MHz to 1GHz AMPLIFIER

- Supply voltage: **1.5V to 5V**
- **>20 mW** adjustable output power
- 28 dB gain at 450 MHz
- 21 dB gain at 900 MHz
- 50 Ω matched input and output
- Bias pin to adjust the amplification class
- Power down

DESCRIPTION

The TSH690 is a wide band RF amplifier, designed in advanced bipolar process. At 450 MHz, it features 28dB gain and +13.5dBm (20 mW) output power at 3V. At 900 MHz, it features 23 dB gain and +15.5 dBm (35 mW) output power at 3V.

The pin 8 allows a bias current adjust, setting the RF output level and the amplifier behaviour. It allows using the TSH690 from the linear A-class trough the AB-class to power-down mode.

The TSH690 is suited to drive power amplifiers in cellular phones (GSM, TDMA) for which the 'turn-on time' is controlled by a voltage ramp.

The more than 20 mW output power makes the TSH690 dedicated as output stage for 433MHz and 868 MHz ISM transmitters.

APPLICATIONS

- 433 MHz and 868 MHz ISM transmitters
- Telemetering systems
- Remote controls
- Cordless Telephones
- Driver for cellular phones
- Wide band applications

ORDER CODE

Part Number	Temperature Range	Package
		D
TSH690ID	-40, +85°C	•

D = Small Outline Package (SO) - also available in Tape & Reel (DT)

PACKAGE

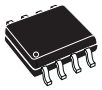

D
SO8
(Plastic Micropackage)

PIN CONNECTIONS (top view)

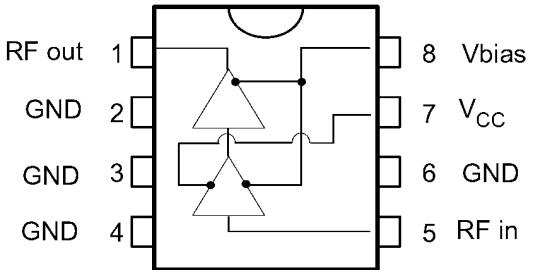

SCHEMATIC DIAGRAM

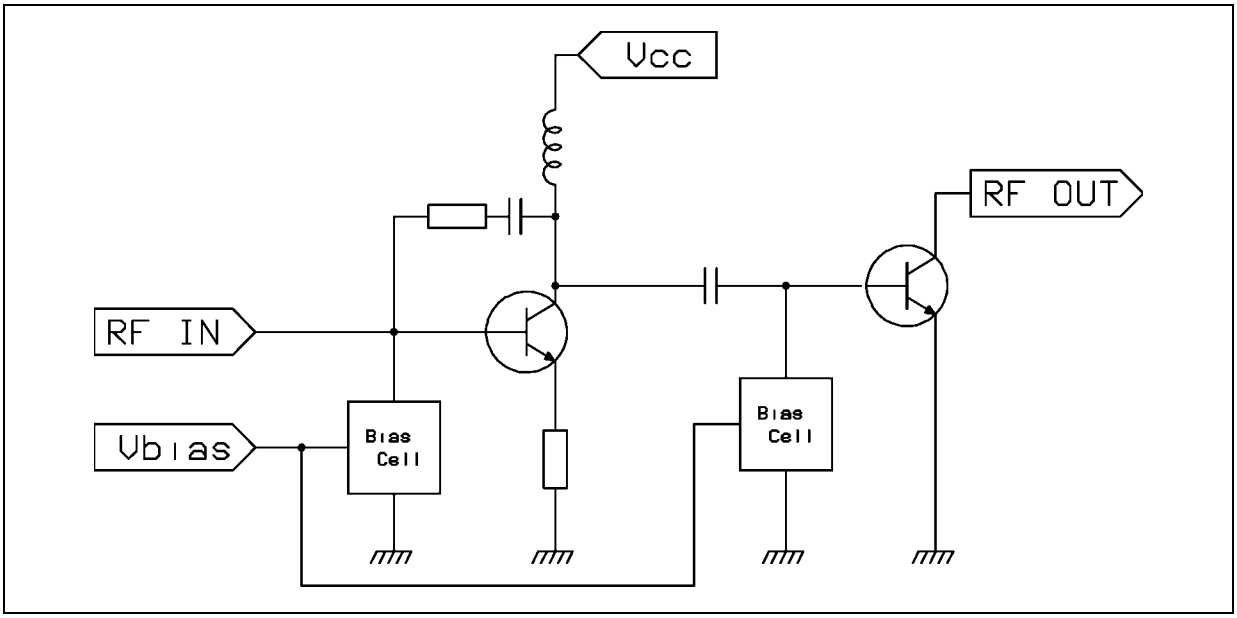

ABSOLUTE MAXIMUM RATINGS

Symbol	Parameter	Value	Unit
V_{CC1}, V_{CC2}, V_{bias}	Supply Voltage & Bias Voltage	5.5	V
RF in	RF Input Power	+10	dBm
RF out	RF Output Power	+21	dBm
T_{oper}	Operating Free Air Temperature Range	-40 to +85	°C
T_{stg}	Storage Temperature Range	-65 to +150	°C

OPERATING CONDITIONS

Symbol	Parameter	Value	Unit
V_{CC1}, V_{CC2}	Supply Voltages	1.5 to 5	V
V_{bias}	Bias Voltage	0 to 5	V
RF_{sr}	RF Signal Range	40 to 1000	MHz

ESD SENSITIVE DEVICE

Handling Precautions Required

ELECTRICAL DC CHARACTERISTICS

Tamb = 25°C, V_{CC} connected to V_{bias}, Z_L = 50Ω (unless otherwise specified)

Parameter	Min.	Typ.	Max.	Unit
Supply Current				mA
Vcc = 2V		29		
Vcc = 2.7V		46		
Vcc = 3V	33	53		
Vcc = 4V		79		
Vcc = 5V		105		
Rth-(j-a): Junction Ambient Thermal Resistance for SO-8 Package	140		180	°C/W

TSH690 DISSIPATION CONSIDERATIONS

In order to respect the dissipation limitation of the package, you should consider the following equation:

$$T_j - T_{amb} = P_d \bullet R_{th(j-a)}$$

with:

$R_{th(j-a)}$ = junction ambient thermal resistance

T_j (°C) = max. junction temperature (150°C)

T_{amb} (°C) = ambient temperature

P_d (W) = maximum dissipated power

The respect of this condition forms a safe area on the following figure:

Figure 1 : Dissipation capability vs T ambient

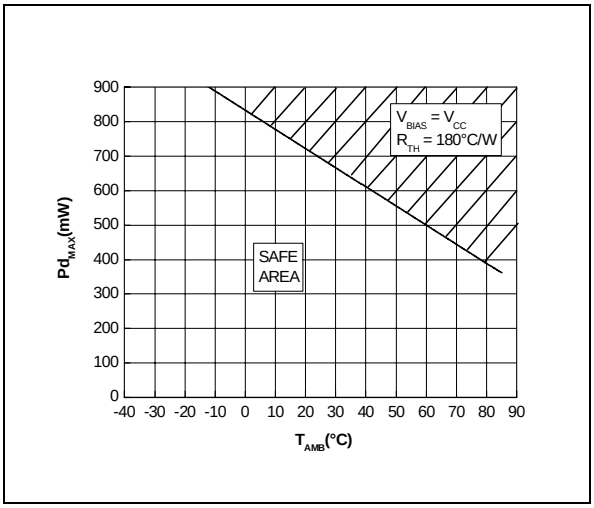

If VBIAS is DC connected to VCC, the operating temperature can be directly determined without determining ICC, thanks to the direct reading curve:

Figure 2 : Maximum T_{amb} vs V_{CC}

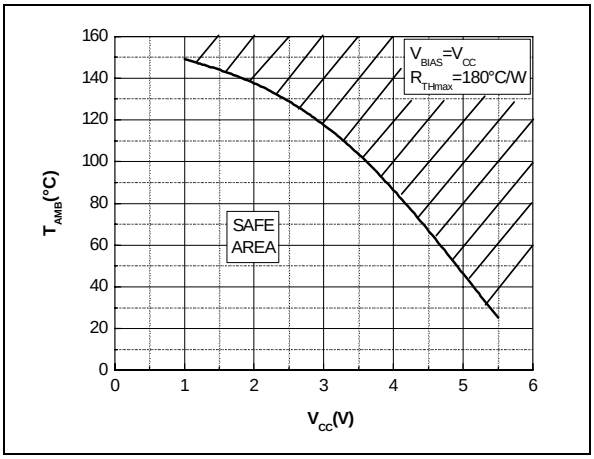

In applications using a duty cycle, the average dissipation is less than in continuous mode. The following figure gives the relation beetween the dissipated power and the duty cycle.

Figure 3 : Dissipation vs Duty cycle

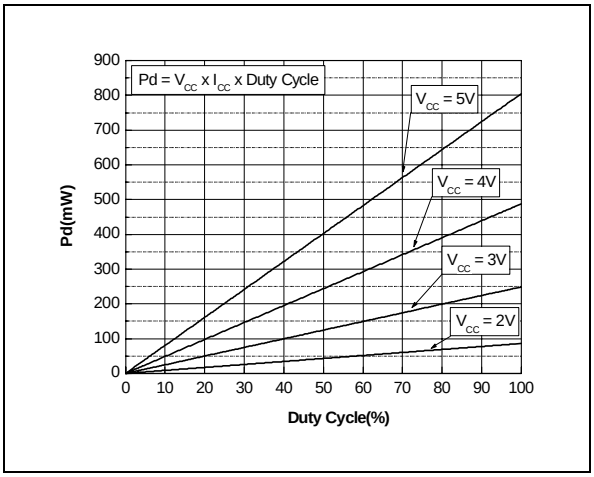

ELECTRICAL CHARACTERISTICS AT 450 MHz

Tamb = 25°C, V_{CC} & V_{bias} = +2.7V, Z_L = 50Ω, f = 450 MHz (unless otherwise specified)

Parameter[1)]	Min.	Typ.	Max.	Unit
Power gain S21 (P_{in} = -20dBm)	20	23	30	dB
Output Power 1dB Compression	8	12		dBm
3rd Order Intercept Point (f = 430MHz)	16	22		dBm
Reverse Isolation S12 (f = 400MHz)		-46		dB
Input Return Loss S11	-10	-15		dB
Noise Figure		4.5		dB

1. All min. and max. parameters of this table are garanteed by correlation with 900 MHz tests.

ELECTRICAL CHARACTERISTICS AT 900 MHz

Tamb = 25°C, V_{CC} & V_{bias} = +3V, Z_L = 50Ω, f = 900 MHz (unless otherwise specified)

Parameter[1)]	Min.	Typ.	Max.	Unit
Power gain S21 (P_{in} = -20dBm)	19	21		dB
Output Power at 1dB compression point	+12	+14.3		dBm
Output power, Pin = -7 dBm	+10	+11.7		dBm
3rd Order Intercept Point		+25		dBm
Reverse Isolation S12		-35		dB
Input Return Loss S11		-14		dB
Output Return Loss S22		-4.5		dB
Noise figure		5.4		dB

1. All min. and max. parameters of this table are garanteed by test.

SCATTERING PARAMETERS MEASUREMENT (Reference waves planes at package leads)

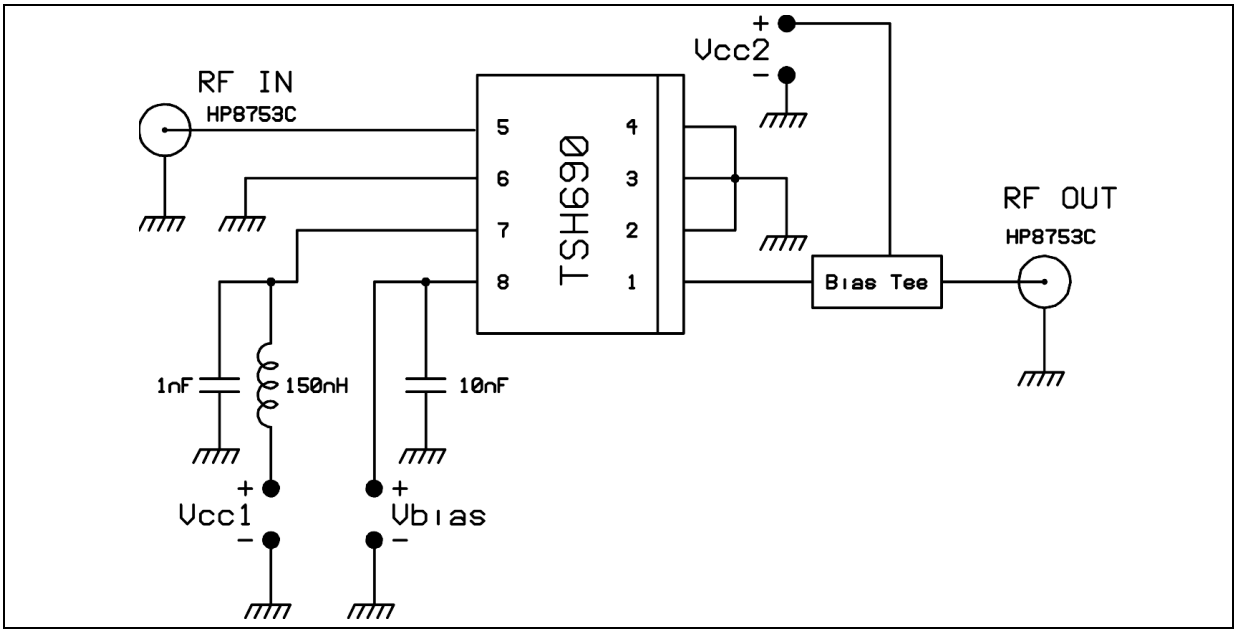

TEST CONDITIONS V_{CC1}, V_{CC2}, V_{bias} = +2V, Pin = -40dBm, T_{amb} = 25°C

Freq	S11		S21		S12		S22	
MHz	Mag	Ang	Mag	Ang	Mag	Ang	Mag	Ang
40	0.642	-22.0	6.319	5.0	0.003	-126.5	0.715	-54.7
50	0.615	-25.7	6.406	7.1	0.008	170.7	0.631	-64.7
100	0.537	-41.3	7.643	7.7	0.002	70.1	0.369	-91.3
150	0.490	-55.6	9.353	3.1	0.004	-141.9	0.253	-100.9
200	0.464	-68.0	11.502	-5.7	0.007	-117.3	0.202	-100.9
250	0.428	-79.0	13.856	-18.0	0.003	162.3	0.203	-92.7
300	0.413	-92.1	16.229	-33.4	0.005	142.1	0.209	-87.6
350	0.373	-101.5	18.019	-51.2	0.008	101.4	0.263	-89.4
400	0.334	-106.7	19.110	-70.1	0.008	115.2	0.326	-99.7
450	0.312	-111.5	19.159	-90.3	0.008	169.9	0.382	-112.1
500	0.290	-112.5	18.154	-108.0	0.008	111.5	0.395	-122.9
550	0.302	-114.5	16.778	-124.8	0.010	92.1	0.425	-130.0
600	0.324	-118.2	15.075	-140.5	0.015	93.6	0.424	-139.6
650	0.335	-122.9	13.482	-153.6	0.011	109.6	0.427	-150.8
700	0.349	-129.6	11.992	-165.5	0.011	101.7	0.425	-159.0
750	0.368	-135.0	10.750	-177.2	0.019	82.4	0.414	-169.5
800	0.366	-142.1	9.453	173.4	0.011	79.5	0.413	-177.8
850	0.373	-147.9	8.598	165.0	0.015	60.2	0.432	176.2
900	0.374	-154.1	7.783	155.8	0.013	89.7	0.438	166.4
950	0.381	-159.0	7.117	146.7	0.017	111.3	0.447	160.8
1000	0.377	-165.8	6.500	138.9	0.013	82.2	0.462	155.1

TEST CONDITIONS V_{CC1}, V_{CC2}, V_{bias} = +3V, Pin = -40dBm, T_{amb} = 25°C

Freq	S11		S21		S12		S22	
MHz	Mag	Ang	Mag	Ang	Mag	Ang	Mag	Ang
40	0.616	-23.3	9.237	6.2	0.002	-135.8	0.733	-56.9
50	0.595	-27.0	9.402	7.9	0.005	-169.5	0.651	-67.7
100	0.513	-43.4	11.263	6.5	0.006	-153.8	0.381	-101.7
150	0.470	-57.7	13.566	0.9	0.006	94.5	0.227	-119.1
200	0.436	-71.1	16.434	-8.6	0.007	155.8	0.156	-117.5
250	0.402	-82.2	19.416	-21.3	0.007	154.1	0.134	-100.3
300	0.382	-95.0	22.265	-36.6	0.005	7.2	0.135	-75.7
350	0.343	-103.3	24.337	-53.7	0.008	40.6	0.193	-78.0
400	0.302	-109.7	25.564	-71.8	0.010	125.9	0.269	-86.1
450	0.279	-114.8	25.594	-91.2	0.008	167.1	0.316	-100.6
500	0.271	-114.0	24.292	-108.3	0.011	120.2	0.356	-111.0
550	0.280	-116.1	22.527	-124.7	0.013	101.0	0.396	-119.3
600	0.306	-119.8	20.511	-140.1	0.005	89.9	0.404	-131.3
650	0.315	-125.5	18.282	-153.2	0.006	107.2	0.400	-142.6
700	0.330	-131.1	16.311	-165.1	0.007	78.9	0.406	-151.6
750	0.333	-136.2	14.604	-177.1	0.012	84.5	0.398	-160.4
800	0.343	-142.5	12.860	173.6	0.017	76.0	0.399	-170.5
850	0.346	-148.0	11.668	165.1	0.014	90.8	0.411	-178.8
900	0.354	-155.1	10.579	156.0	0.018	75.6	0.413	170.9
950	0.347	-159.6	9.652	147.0	0.013	66.6	0.439	165.2
1000	0.355	-166.2	8.775	139.2	0.018	75.3	0.459	157.3

TEST CONDITIONS V_{CC1}, V_{CC2}, V_{bias} = +4V, Pin = -40dBm, T_{amb} = 25°C

Freq	S11		S21		S12		S22	
MHz	Mag	Ang	Mag	Ang	Mag	Ang	Mag	Ang
40	0.614	-23.1	11.023	6.9	0.002	107.6	0.726	-54.4
50	0.590	-27.4	11.248	7.9	0.003	-111.3	0.646	-65.1
100	0.508	-44.6	13.262	4.5	0.004	-47.0	0.366	-97.6
150	0.465	-59.9	15.736	-2.0	0.006	-62.5	0.206	-110.4
200	0.429	-72.0	18.727	-11.5	0.003	97.7	0.130	-104.3
250	0.396	-83.4	21.837	-24.2	0.002	-135.5	0.108	-78.6
300	0.371	-94.7	24.804	-39.3	0.009	154.7	0.136	-56.7
350	0.335	-103.8	26.854	-56.0	0.006	135.2	0.191	-64.3
400	0.295	-109.9	28.077	-73.6	0.003	139.7	0.262	-75.2
450	0.275	-114.8	28.113	-92.5	0.010	97.0	0.321	-85.8
500	0.265	-114.8	26.710	-109.4	0.007	111.8	0.335	-98.2
550	0.282	-117.0	24.831	-125.5	0.007	93.8	0.389	-108.5
600	0.296	-120.3	22.620	-140.8	0.007	110.0	0.393	-121.0
650	0.314	-124.7	20.235	-154.1	0.005	85.1	0.402	-131.7
700	0.321	-131.5	18.081	-166.2	0.010	93.2	0.388	-143.9
750	0.334	-135.8	16.178	-178.0	0.012	106.1	0.390	-153.8
800	0.339	-143.8	14.235	172.5	0.010	74.1	0.377	-162.4
850	0.348	-149.4	12.941	164.1	0.014	57.9	0.392	-170.4
900	0.340	-157.5	11.693	154.9	0.014	80.2	0.402	179.5
950	0.352	-161.0	10.670	145.7	0.006	87.4	0.409	171.4
1000	0.341	-166.8	9.683	137.6	0.016	50.0	0.433	163.3

Figure 4 : Demonstration board schematic

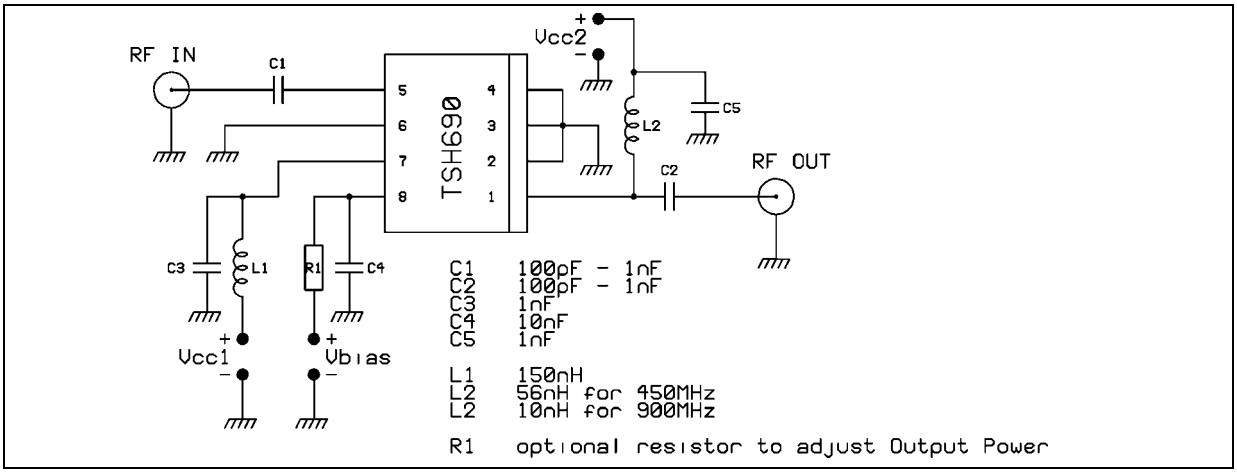

TSH690 DESCRIPTION

The TSH690 is a 2 transistor stages amplifier running within the 40MHz-1GHz frequency band featuring a gain of 28dB at 433MHz. The TSH690 is 50Ω input/output internally matched from 300MHz to 1000MHz. The open collector output requires an inductive load for the impedance matching and also to reach an output power of +13,5dBm at 3V and +18dBm at 4V. A bias control pin allows tuning of current consumption and amplification mode.

As the matter of fact, when the bias pin is tied to the supply voltage, amplification is linear (Class A) while a lower voltage leads to a Class A-B amplification featuring a better efficiency. If the control voltage is grounded, the TSH690 is set in Power-down mode without current consumption.

MATCHING THE OUTPUT WITH L2

Within the 300-1000MHz band, although the circuit is matched, the output return loss (S22) can be improved by adapting the value of the inductor L2. This inductor is connected between the RF output and V_{CC2}.

L2 = 56 nH gives an output return loss of -19 dB at 450 MHz.

L2 = 10 nH gives an output return loss of - 8 dB at 900 MHz.

In a 433 or 450 MHz transmitter application, L1 and L2 can be optimized to reduce the second harmonic by choosing L1 = 33nH and L2 = 15nH.

Below 300MHz, using the S-parameters matrix, specific input/output matching networks can be calculated to maximize electrical performances.

DC BLOCKING

Because input/output are respectively internal/external biased, DC blocks (C1, C2) are recommended on both RF ports to guarantee a DC isolation from the next cells. Above 500MHz, 100pF is suggested whereas below, 1nF is better and far below (less than 100MHz), 10nF is prefered.

BIASING

The amplifier can operate in the range of 1.5V to 5V and offers a bias current adjust function (Vbias pin) which enables the trimming of the RF output power (AB class Amplifier) by tuning a series variable resistor (Rbias).
When Vbias is wired to the Vcc rail, the current consumption is maximized getting the best linearity (A class Amplifier) whereas biasing to Ground, the IC is set in power down mode.
For higher supply voltage than 4V to reach high output power, the serial resistor (R1) is strongly recommended to increase the efficiency of the amplifier and therefore reduce the thermal dissipation of the circuit.

DECOUPLING

As with any RF devices, the supply voltage decoupling must be done carefully using a 1nF bypass capacitor (C3, C5) placed as close as possible to the device pins and could be also improved by adding a 150nH RF choke inductance (L1). Concerning the Vbias pin, a 10nF decoupling capacitor (C4) is recommended while placing on board is not critical. Note that Surface Mounted Devices (SMD) components are prefered for RF applications due to the right behaviour in high frequencies while low inductor values (few 10nH) can be printed on board.

DETERMINING VBIAS AND R1 AT 450 MHz

Using the 450 MHz curves, you can easily determine V_{BIAS} voltage and R1 to obtain the desired power gain S21.

For a given gain S_{21} and a given supply voltage V_{CC}, you can determine the corresponding V_{BIAS}.using the curve 'Gain vs V_{BIAS}' in the '450 MHz operation' section.

It's generally more convenient to supply the Vbias from V_{CC} than generate a separate voltage. You just need to add the R1 resistor beetween the V_{BIAS} pin and V_{CC}.

Using the curve 'Supply current vs Bias voltage' you can determine the current I_{BIAS} corresponding to a V_{BIAS} . R1 can calculated by:

$R1 = (V_{CC} - V_{BIAS}) / I_{BIAS}$.

One the same curve, you will find the total current supply Icc versus the biasing conditions.

Figure 5 : Demo board silk screen (not to scale)

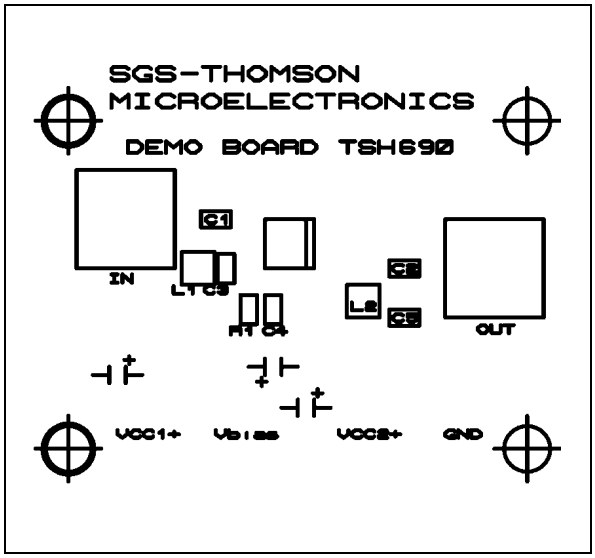

Figure 6 : Demo board top side (not to scale)

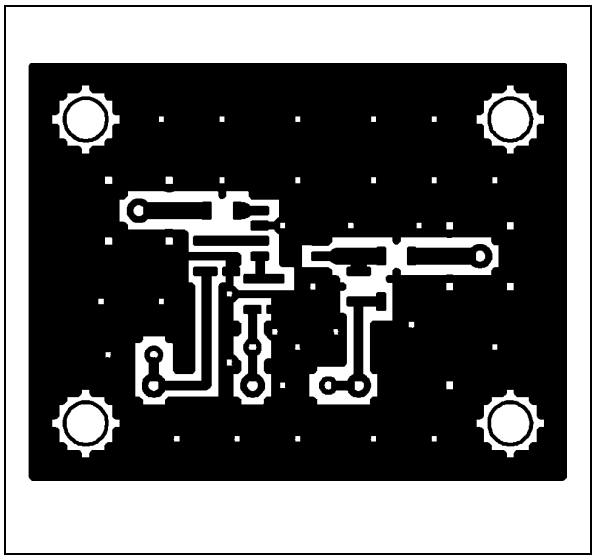

450 MHz operation (L2 = 56 nH)

GAIN vs FREQUENCY

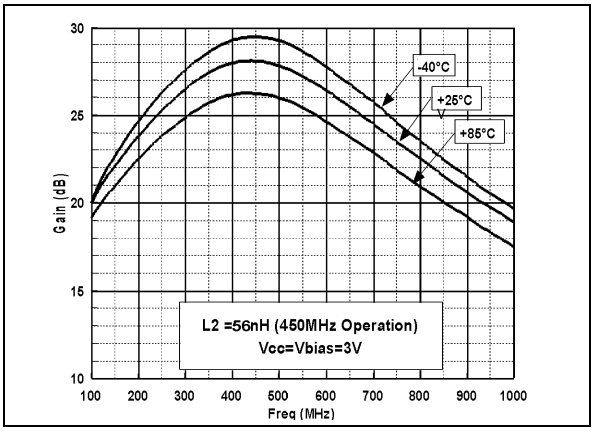

OUTPUT RETURN LOSS

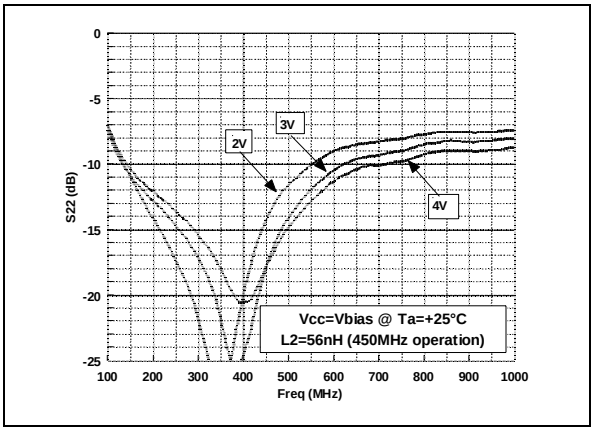

INPUT RETURN LOSS

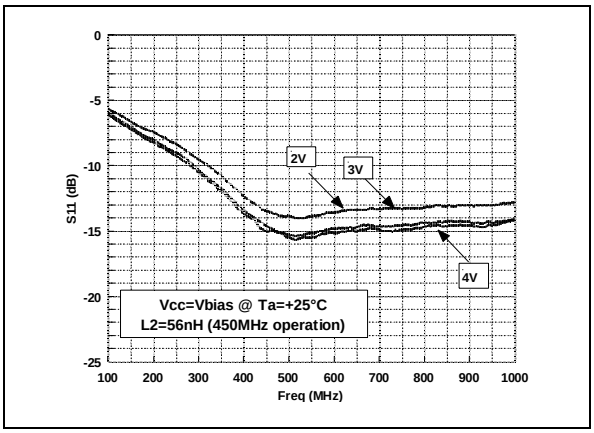

GAIN vs VBIAS VOLTAGE

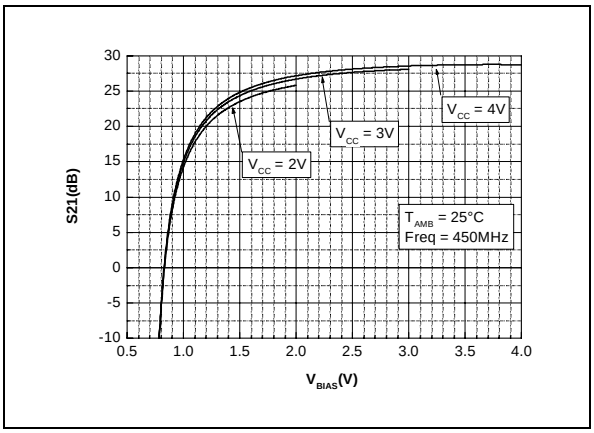

900 MHz operation (L2 = 10 nH)

GAIN vs FREQUENCY

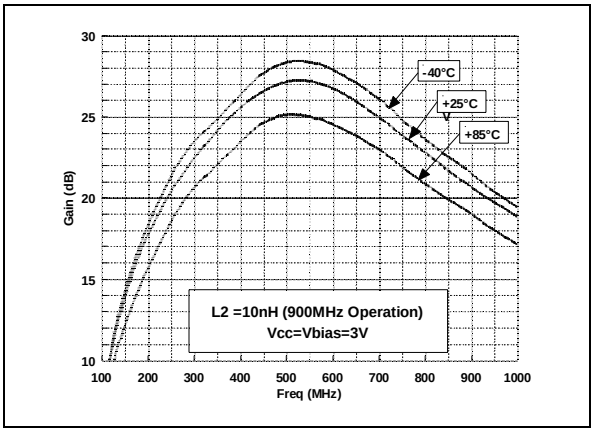

OUTPUT RETURN LOSS

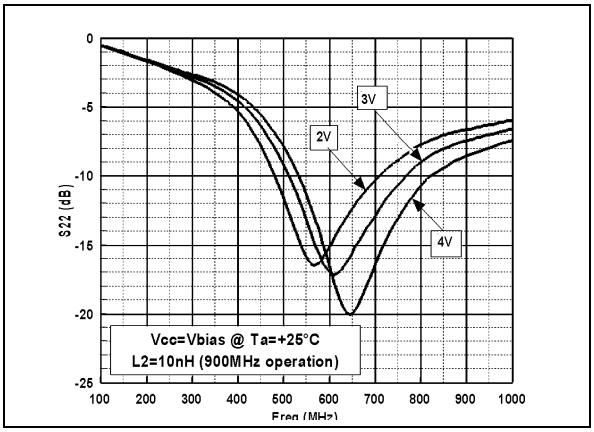

INPUT RETURN LOSS

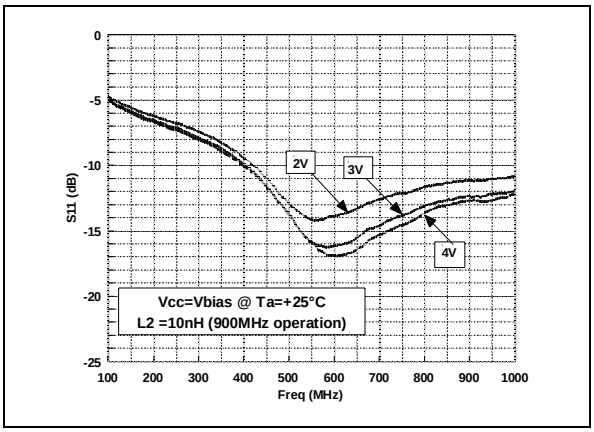

OUTPUT POWER vs INPUT POWER

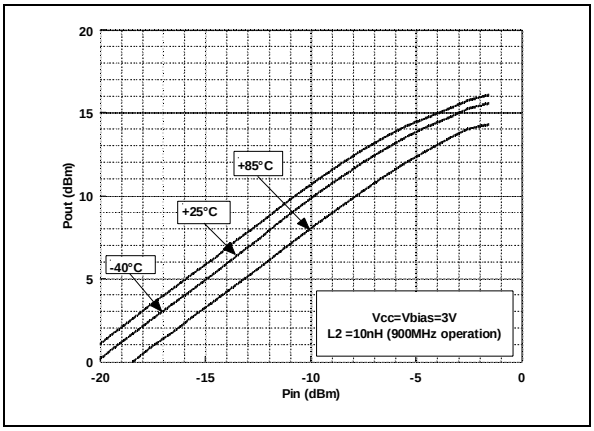

OUTPUT POWER vs VBIAS

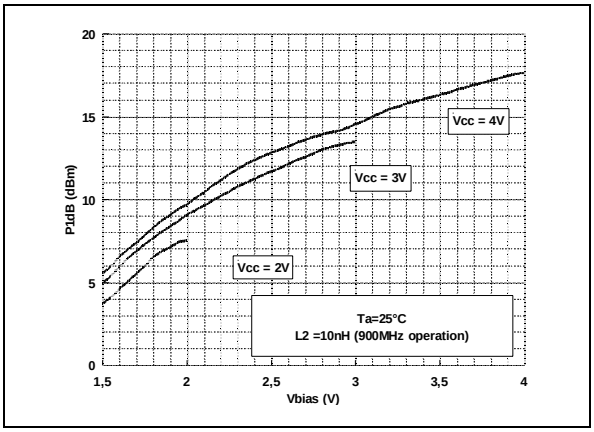

Other curves

REVERSE ISOLATION vs FREQUENCY

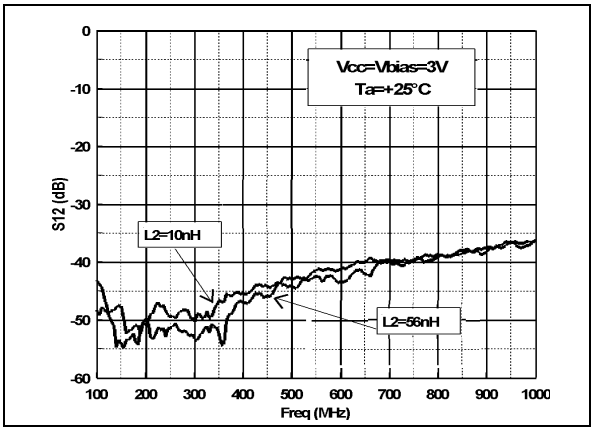

SUPPLY CURRENT vs BIAS VOLTAGE

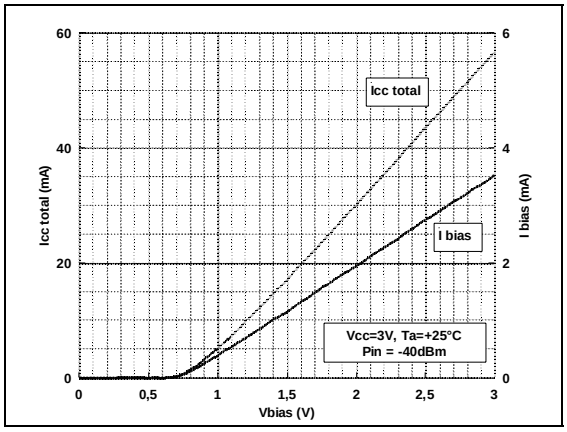

ASK TRANSMITTER USING THE TSH690

Application purpose

The purpose is to use the TSH690 as a ASK transmitter for remote control applications taking benefits of the 2 stages architecture, the bias control pin and output power capability.

The first transistor stage is devoted to the oscillator by the meaning of a Surface Acoustic Wave (SAW) resonator while the second stage realizes the power amplification to drive antennas including the impedance matching.

Modulation is insured by applying the modulating signal onto the bias pin of TSH690 to get an amplitude modulation.

Figure 7 : Saw transmitter schematic

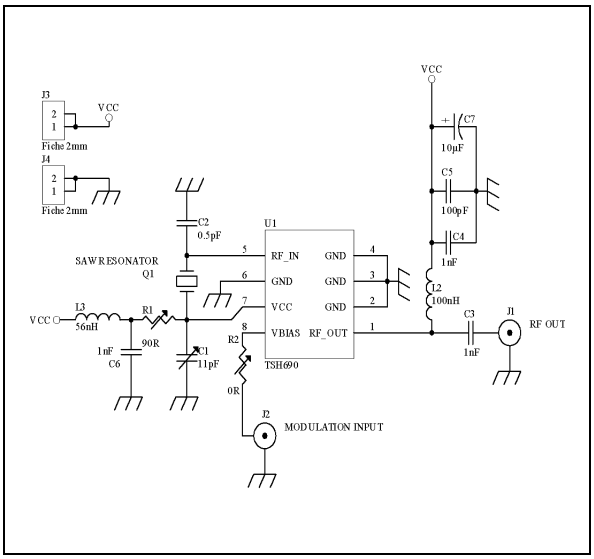

Oscillator Considerations

The oscillator frequency is given by the SAW resonator which is connected between pins 5 & 7 of the TSH690 to ensure a well-known Colpitts architecture with 2 capacitors C1 and C2. Capacitor C2 is a small value one and, depending on PCB, could be directly obtained from parasitics of microstrip lines. Center frequency is tuned with the trimmer capacitor C1.

Note that the pin 7 is internally connected to an integrated self inductor L1 which is wired to the collector of the first stage transistor. A resistor R1 is placed to avoid resonance between L1 and C1 but also to adjust the current consumption of the oscillator.

Moreover, start-up conditions and output harmonics levels are related to the R1 value, so that its recommended to use a potentiometer for R1.

By tuning R1 and C1, stability of the circuit can be guaranted disregarding the load impedance of the output stage.

Output Stage

The output matching is defined for a 50Ω load impedance by adding a 100nH self-inductor L2 as load to the open collector of the output stage while capacitor C3 is just placed as a DC block with the antenna.

In such described conditions, output power on fundamental reaches more than +13dBm under 3V with an average current consumption of 50mA featuring 2nd & 3rd harmonics levels respectively of -18dBc et -27dBc.

Modulation

As a result of applying a modulating signal to the bias pin (pin 8), the TSH690 features an amplitude modulation up to the On-Off-Keying when the modulating signal is digital.

A series resistor R2 can be added on pin 8 to change biasing conditions but also oscillating conditions and finally the available output power. In most of applications, this resistor can be omitted.

In the case of digital modulation control, when a ‘0’ logic level is applied on pin 8, the circuit in set in Standby mode during which the oscillator is stopped whereas during a ‘1’ logic level, the circuit radiates RF wave due to oscillator running mode.The maximum data rate of modulating signal is given by the oscillator turn-on time which is typically of 200µs to reach the nominal operating frequency and amplitude. Note that the turn-off time is negligeable. Thus, it is recommended to use a data rate of 2400b/s to keep a duty cycle of 25% (T_ON~200µs, T_OFF~(400+200)µs). For a higher data rate (maximum of 4800b/s), duty cycle on transmission side decreases drastically so that it is recommended to use a monostable on reception side to recover a correct 50% duty cycle. In order to decrease the spectrum shape of transmission, a simple low-pass filter can be added in front of pin 8 to attenuate high level harmonics of the modulating signal.

Figure 8 : PCB component side (not to scale)

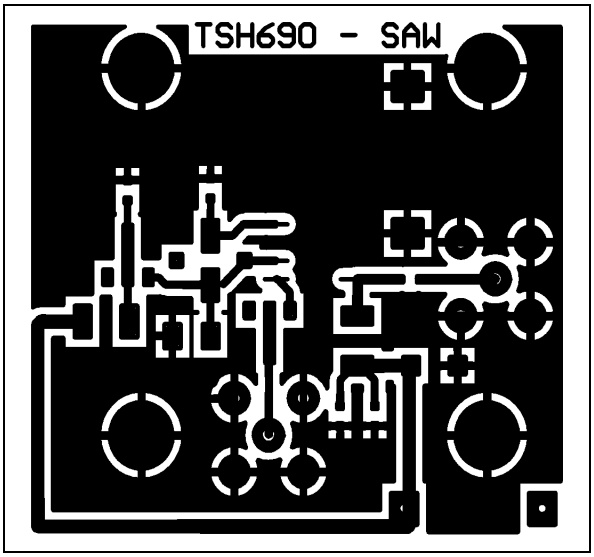

Figure 9 : PCB solder side (not to scale)

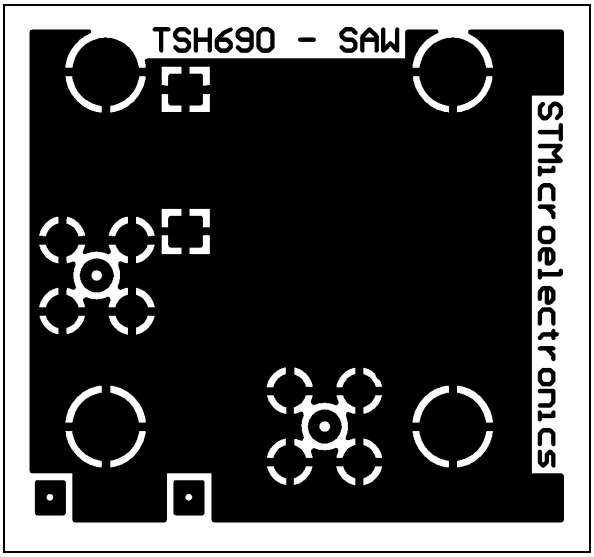

Figure 10 : Silk screen (not to scale)

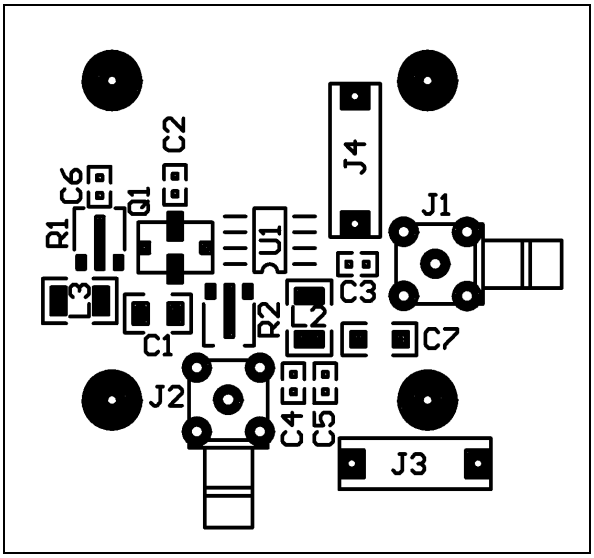

Routing Requirements

Supply voltages : as well as any RF design boards, decoupling of supply voltages requires carefully routing. So, the output stage features a 10µF tank capacitor to smooth current peaks and 2 decoupling capacitors of 1nF and 100pF avoiding a RF feedback to the supply.
The oscillator biasing (pin 7) requires a RF choke self inductance of 56nH in series with R1 and also a grounded decoupling capacitor of 1nF.
Ground : The ground routing has to be done in the manner of decreasing resistive and inductive parasitics effects to guarantee the best equipotential of the electrical ground node. By using microstrip lines, bottom and top ground planes must be connected via through holes in respect with a distance shorter than 10 times the running wavelength. In practice, with a standard epoxy substrate (Er~4,5), to run at about 450MHz, distance between 2 vias must not exceed ~3cm. By using a standard 2.54mm PCB grid, design takes profit to avoid harmonics radiation.

Improvements

In comparison with the first diagram proposal, 2nd & 3rd harmonics levels can be reduced respectively as low as -27dBc and -34dBc by replacing L2 with a parallel tank circuit (LC) of 10nH, 13pF. In such a condition, fundamental output level is slightly degraded of less than 0.5dB keeping a good 50Ω impedance matching.

PACKAGE MECHANICAL DATA

8 PINS - PLASTIC MICROPACKAGE (SO)

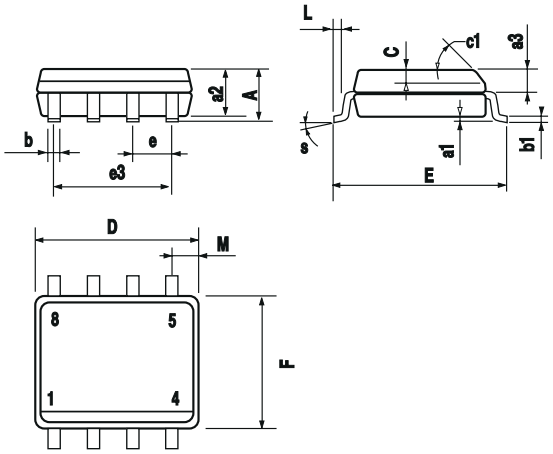

Dim.	Millimeters			Inches		
	Min.	Typ.	Max.	Min.	Typ.	Max.
A			1.75			0.069
a1	0.1		0.25	0.004		0.010
a2			1.65			0.065
a3	0.65		0.85	0.026		0.033
b	0.35		0.48	0.014		0.019
b1	0.19		0.25	0.007		0.010
C	0.25		0.5	0.010		0.020
c1	45° (typ.)					
D	4.8		5.0	0.189		0.197
E	5.8		6.2	0.228		0.244
e		1.27			0.050	
e3		3.81			0.150	
F	3.8		4.0	0.150		0.157
L	0.4		1.27	0.016		0.050
M			0.6			0.024
S	8° (max.)					

Information furnished is believed to be accurate and reliable. However, STMicroelectronics assumes no responsibility for the consequences of use of such information nor for any infringement of patents or other rights of third parties which may result from its use. No license is granted by implication or otherwise under any patent or patent rights of STMicroelectronics. Specifications mentioned in this publication are subject to change without notice. This publication supersedes and replaces all information previously supplied. STMicroelectronics products are not authorized for use as critical components in life support devices or systems without express written approval of STMicroelectronics.

© The ST logo is a registered trademark of STMicroelectronics

© 2001 STMicroelectronics - Printed in Italy - All Rights Reserved

STMicroelectronics GROUP OF COMPANIES

Australia - Brazil - China - Finland - France - Germany - Hong Kong - India - Italy - Japan - Malaysia - Malta - Morocco
Singapore - Spain - Sweden - Switzerland - United Kingdom

© http://www.st.com